Datasheet: V200 and V210

Product Specification

MEASURING INSTRUMENTS DIRECTIVE 2004/22/EC SPECIFICATIONS ACCORDING TO OIML R49, EN14154 AND ISO4064

EXCEEDING CLASS D EQUIVALENT						
METER MODEL			V200	V200	V210	V210
METER SIZE		mm	15	20	15	20
FLOW RANGE Q_3/Q_1	R		400	315	400	315
OVERLOAD FLOW RATE	$Q_4 \pm 2\%$	m^3/h	3.125	5	3.125	5
PERMANENT FLOW RATE	$Q_3 \pm 2\%$	m^3/h	2.5	4	2.5	4
TRANSITIONAL FLOW RATE	$Q_2 \pm 2\%$	l/h	10.00	20.32	10.00	20.32
MINIMUM FLOW RATE	$Q_1 \pm 5\%$	l/h	6.25	12.70	6.25	12.70
STARTING FLOW (APPROXIMATELY)		l/h	1	2	1	2

FLOW RANGE R160* (CLASS C EQUIVALENT)												
METER MODEL			V200	V200	V200	V200	V200	V200	V200	V210	V210	V210
METER SIZE		mm	15	20	25	30	30	40	40	15	20	25
METER THREAD SIZE		in	G¾"A	G1"A	G1 ¼"A	G1 ¼"A	G1 ½"A	G2"A	G2"A	G1 ½"A	G1 ½"A	G2"A
OVERLOAD FLOW RATE	$Q_4 \pm 2\%$	m^3/h	3.125	5	7.875	12.5	12.5	12.5	20	3.125	5	7.875
PERMANENT FLOW RATE	$Q_3 \pm 2\%$	m^3/h	2.5	4	6.3	10	10	10	16	2.5	4	6.3
TRANSITIONAL FLOW RATE	$Q_2 \pm 2\%$	l/h	25	40	63	100	100	100	160	25	40	63
MINIMUM FLOW RATE	$Q_1 \pm 5\%$	l/h	15.625	25	39.375	62.5	62.5	62.5	100	15.625	25	39.375
STARTING FLOW (APPROXIMATELY)		l/h	1	2	6	12	12	12	20	1	2	6
DIAMETER (A)		mm	94	94	120	150	150	150	181	94	94	130.5
HEIGHT (B)**		mm	113	111	130	145	145	145	166	126	136	142
HEIGHT WITH LID OPEN (C)		mm	180	177	200	215	215	215	236	193	203	209
LENGTH (D)		mm	110, 115, 134, 165, 170	165, 190	199, 260	199, 260	199, 260	300	300	n/a	n/a	n/a
HEIGHT WITH ENCODER OR HYBRID		mm	127	125	144	159	159	159	184	140	150	156
LENGTH OVER CONNECTIONS (E)		mm	195, 200, 228, 250, 255	267, 288	311, 370	327, 380	327, 380	421	421	n/a	n/a	n/a
WEIGHT (APPROXIMATELY)		kg	1.0	1.2, 1.3	2.3, 2.6	3.4, 3.7	3.4, 3.7	4.0	6.1	0.9	1.0	2.0

Headloss at Q_3 less than 0.63 bar.
Maximum water temperature 30°C, working pressure 16 bar. Maximum registration 99999.99m^3.
*Note: Other Q_3/Q_1 ratios are available on request
**Height with PR6 = B + 10mm, with TPR6 or TPR11= B + 48mm.

REGISTER OPTIONS		
INDUCTIVE	1 Pulse/litre	PR6 and TPR11 compatible
ENCODER	Full reading in m^3	
HYBRID (ELECTRONIC)	Full reading in m^3	

V210

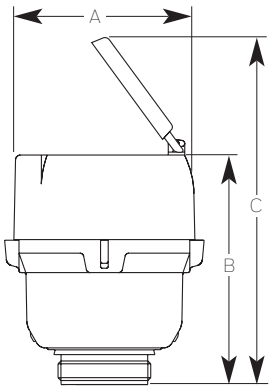

V200

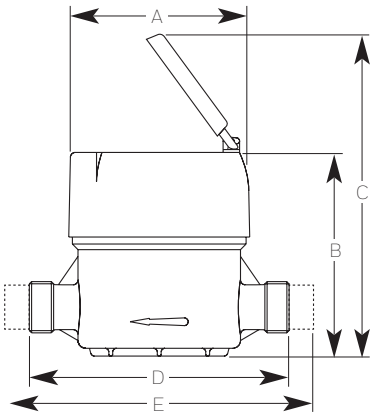

V200 and V210 Product Specification

TYPICAL ACCURACY CURVE

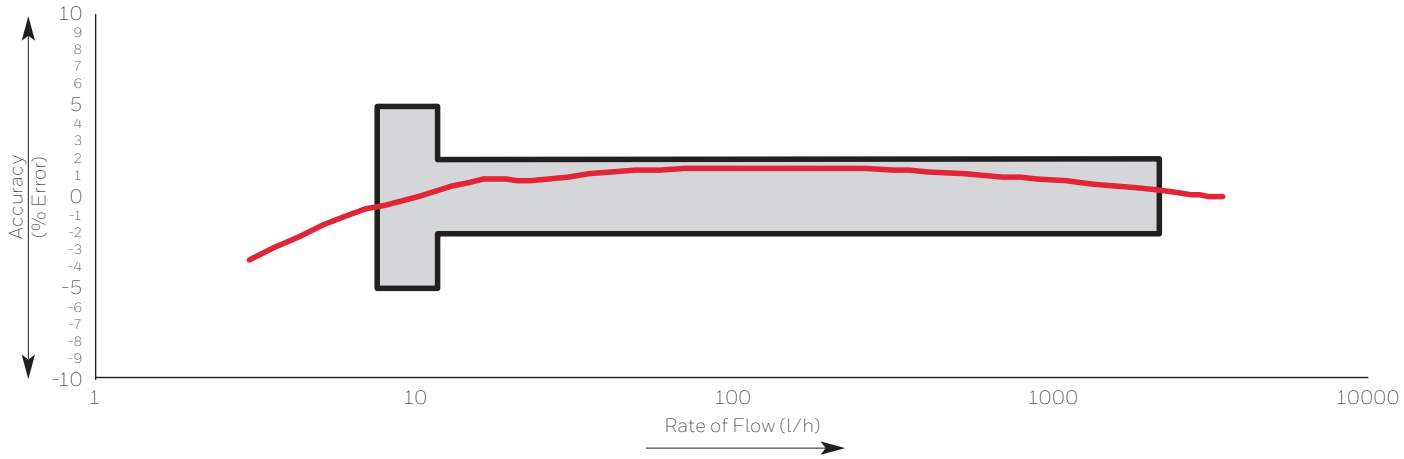

Pressure equipment directive 97/23/EC:

This product is applicable in networks for the supply, distribution and discharge of water and associated equipment and is therefore exempt.

For more information
www.elstermetering.com

Elster Water Metering Ltd
130 Camford Way
Sundon Park, Luton
Bedfordshire, LU3 3AN
United Kingdom
T +44 1582 846400
F +44 1582 564728
water.metering@elster.com

All rights reserved. The company's policy is one of continuous product improvement and the right is reserved to modify the specifications contained herein without notice. These products have been manufactured with current technology and in accordance with the applicable referenced standards.

Lit Ref: 8516D23103

© 2016 Honeywell International Inc.

Honeywell